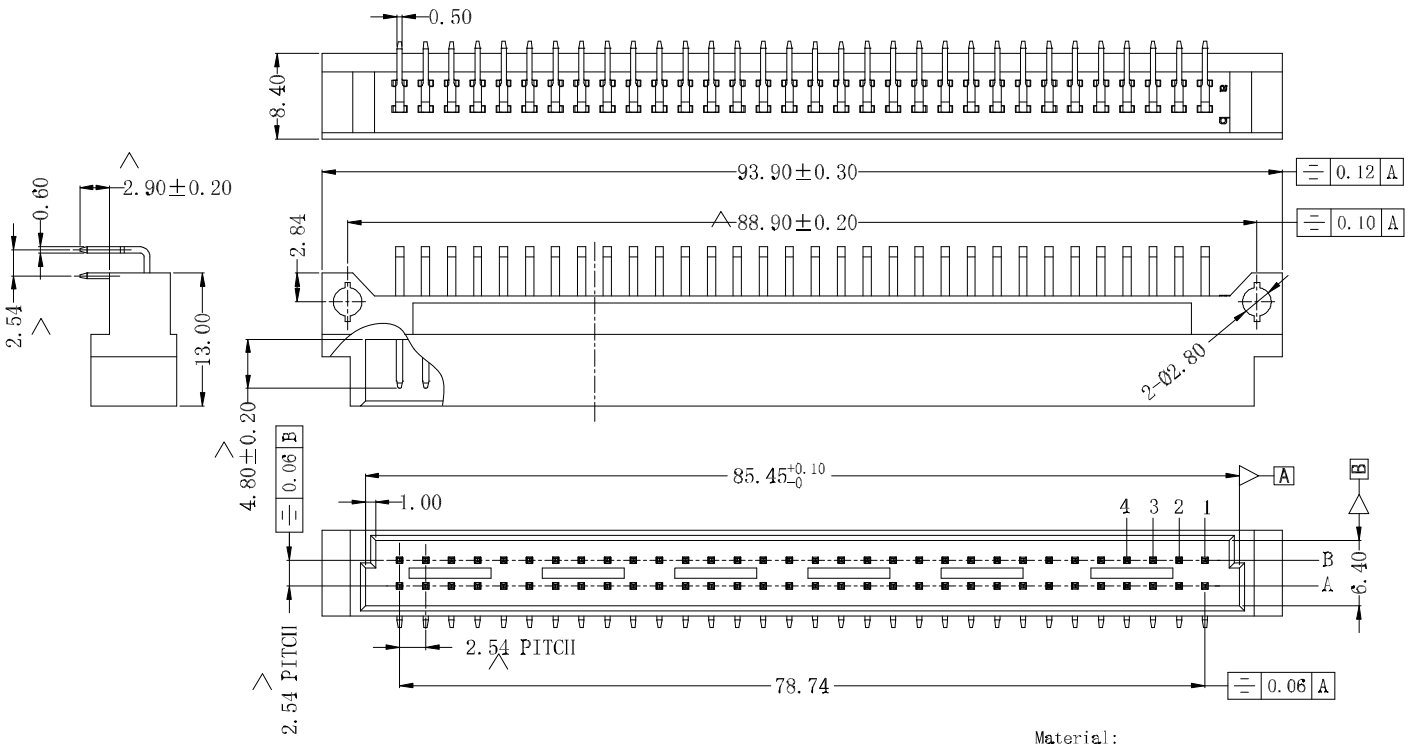

Pitch	Position	Rows with Contacts	Contact Arrange
2.54	64	A B	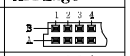
	32	A -	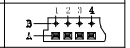
5.08	32	A B	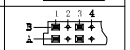
	16	A -	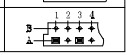

Material:
Housing: PBT+GF30% UL94V-0,COLOR:WHITE;
Contacts: Brass T=0.60.

Finish:
Contact: Gold2~3u" Plated over Nickel 80~100u"

Specification:
Electrical Characteristics:
Current Rating: 2 AMP.
Dielectric Withstanding Voltage: AC 1000V For 1 minute.
Insulator Resistance: 1000MΩmin. at DC 500V.
Contact Resistance: 30mΩMax.at DC 100mA.
Operating Temperature: -55° C~+105° C
Control Dimensions Indicated From".

				TITLE	DIN-264公90度		GENERAL TOLERANCE x. : ±0.3 x.x: ±0.2 x.xx: ±0.1	DRAWN BY	DATE	chizon	CHIZON(CI XI) ELECTRONIC CO.,LTD.		
				SERIES	QC9264MR			CHECKED BY	DATE		啓宸（慈溪）電子有限公司		
				CUSTOMER P/N			ANGLE TOLERANCE x. : ±2° x.x: ±1° x.xx: ±0.5°	APPROVED BY	DATE	DRAWING NO.		SHEET	1 OF 1
				UNITS	mm	PROJECTION		2022.07.25	G.x.zhang	SHEET SIZE	A4	REV.	A0
SCALE	DESCRIPTION	CHK	DATE	SCALE	1:1								